B.Sc. Engineering Group Project Proposal

IoT-Based Prepaid Energy Meter for Apartments and Annexes in Sri Lanka

Submitted By

K.A.S. Kekulawala	222519008
H.S.R. Sarathchandra	123644176
N.G. Kaween Newmal	123643509
D.D.R. Dissanayaka	123611080

Supervisor

Mr. Neil Herth

Lecturer

Submitted to

Department of Electrical and Computer Engineering

Faculty of Engineering Technology

The Open University of Sri Lanka

on

08th of September 2025

Table of Contents

1. Introduction....3
2. Objectives....4
3. Problem Statement....5
4. Proposed Solution....6
5. Expected Outcomes....11
6. Work Plan....12
7. References....13

1. Introduction

In Sri Lanka's rapidly urbanizing cities such as Colombo, Gampaha, Kandy, and Galle, a growing number of people reside in rented apartments and annexes. While this form of housing provides affordability and convenience, electricity billing often becomes a source of conflict between landlords and tenants. In most cases, multiple units share a single electricity meter, making it difficult to fairly distribute costs. As a result, disputes over monthly bills, delayed payments, and overconsumption are common challenges faced by both landlords and tenants.

To address these issues, this project proposes the development of an **IoT-based Prepaid Energy Meter** using the **ESP32 microcontroller** and the **PZEM-004T energy monitoring module**. The system allows landlords to allocate a fixed monthly electricity allowance to each tenant. The tenant consumes electricity within this prepaid balance, and the meter deducts usage in real time. Once the balance is exhausted, the system automatically disconnects power until it is recharged.

The ESP32's built-in Wi-Fi enables remote monitoring through a web or mobile dashboard, providing transparency to both landlords and tenants. The PZEM-004T module ensures accurate measurement of voltage, current, power, and energy consumption, while a relay mechanism guarantees automatic cut-off when the balance reaches zero. By combining prepaid functionality with real-time monitoring, this system eliminates billing disputes, prevents unpaid electricity bills, and encourages responsible energy use.

In the Sri Lankan context, implementing such a solution in apartments and annexes will provide a **cost-effective, transparent, and sustainable approach to electricity management**. Landlords will be able to protect their revenue, while tenants benefit from fair and accountable billing practices.

2. Objectives

The main objective of this project is to design and implement an **IoT-based prepaid energy meter system** tailored for apartments and annexes in Sri Lanka. The system will provide accurate, transparent, and prepaid electricity management for landlords and tenants.

Specific objectives include:

1. **Develop a prepaid metering system** using ESP32 and PZEM-004T that allows landlords to allocate a fixed monthly electricity allowance for each tenant.
2. **Enable real-time monitoring** of key electrical parameters (voltage, current, power, and energy) with instant balance updates.
3. **Integrate an automatic cut-off mechanism** using a relay when the prepaid balance reaches zero, ensuring cost control.
4. **Provide remote accessibility** through Wi-Fi, allowing both landlords and tenants to view usage and remaining balance via a web or mobile dashboard.
5. **Improve transparency and fairness** in billing, eliminating disputes between landlords and tenants.
6. **Promote energy conservation** by making tenants more aware of their individual consumption patterns.

3. Problem Statement

Electricity billing in apartments and annexes across Sri Lanka presents several persistent challenges. Most landlords rely on a single CEB or LECO meter for the entire property, and monthly bills are divided among tenants based on estimates or room size rather than actual usage. This creates:

- **Billing disputes** – Tenants often feel they are overcharged, while landlords face difficulties justifying costs.
- **Unpaid or delayed bills** – When tenants fail to pay their share on time, the landlord is left to cover the total bill.
- **Overconsumption and wastage** – Without direct accountability, tenants may overuse electricity, leaving landlords with higher bills.
- **Lack of transparency** – Tenants cannot track their own consumption, which reduces trust and increases conflict.

These issues not only strain landlord-tenant relationships but also contribute to financial losses and inefficient energy usage. A reliable, transparent, and fair system is therefore required to overcome these recurring problems in the Sri Lankan rental housing market.

4. Proposed Solution

To overcome the challenges of unfair billing, unpaid electricity charges, and energy wastage in Sri Lankan apartments and annexes, this project proposes the design and implementation of an **IoT-based Prepaid Energy Meter** using the **ESP32 microcontroller** and **PZEM-004T energy monitoring module**.

The solution will operate on the principle of **prepaid electricity allocation**. Each tenant will receive a fixed monthly electricity balance (e.g., 50 kWh or LKR 2,000 worth of units). The system will continuously monitor electricity usage in real-time and automatically deduct consumption from the tenant's prepaid balance.

Key Features of the Solution

1. **Accurate Energy Monitoring**

   - The PZEM-004T module will measure voltage, current, power, and total energy consumed.

PZEM-004T

   - Data will be transmitted to the ESP32 for processing.

ESP32

2. **Prepaid Balance Allocation**
    - Landlords can set a monthly allowance for each tenant.
    - Balance is displayed on an LCD/TFT screen in the tenant's room.
3. **Automatic Power Cut-off**
    - A relay module will disconnect the electricity supply when the prepaid balance reaches zero.
    - Power will only be restored once the balance is recharged.
4. **Real-Time Monitoring and Alerts**
    - The ESP32, with built-in Wi-Fi, will send data to a web or mobile dashboard.
    - Both landlords and tenants can check real-time consumption and remaining balance.
    - Low-balance alerts can be issued via display or optional SMS notification.
5. **Recharge Functionality**
    - Tenants can top up their balance by purchasing credits from the landlord.
    - Recharge codes or direct updates from the landlord's dashboard can be used to restore power.
6. **Scalability and Flexibility**
    - The system can be deployed individually in each apartment or annex unit.
    - It can also be scaled for hostels, boarding houses, or rental stalls where fair electricity billing is needed.

Functional Flow (Prepaid Logic)

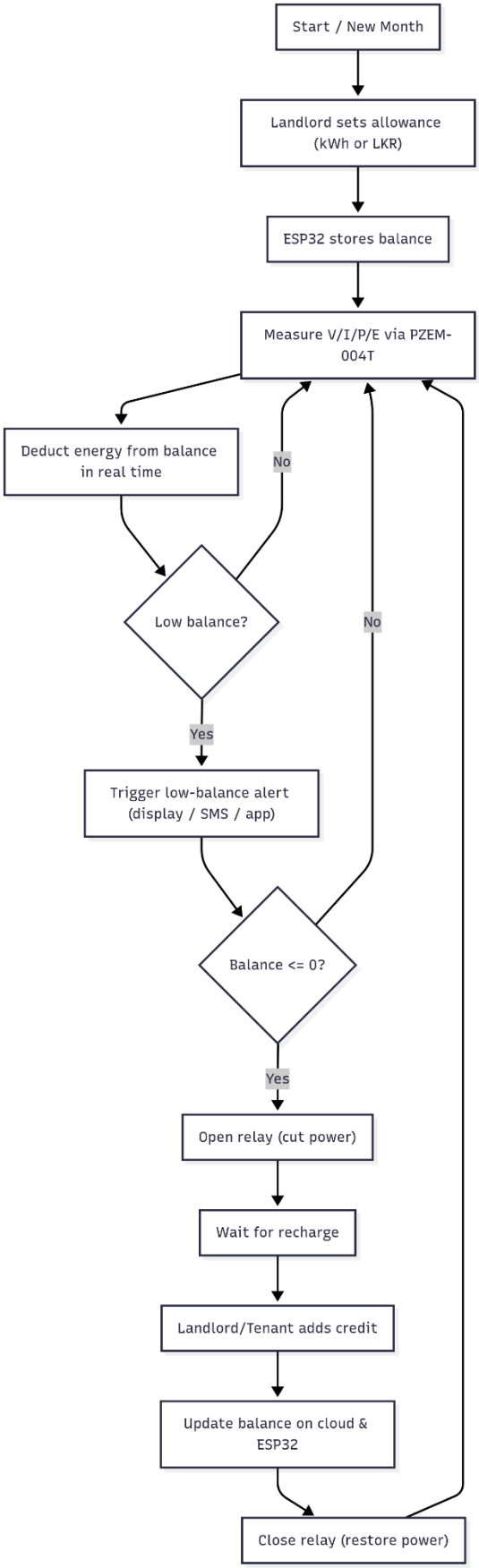

System Block Diagram

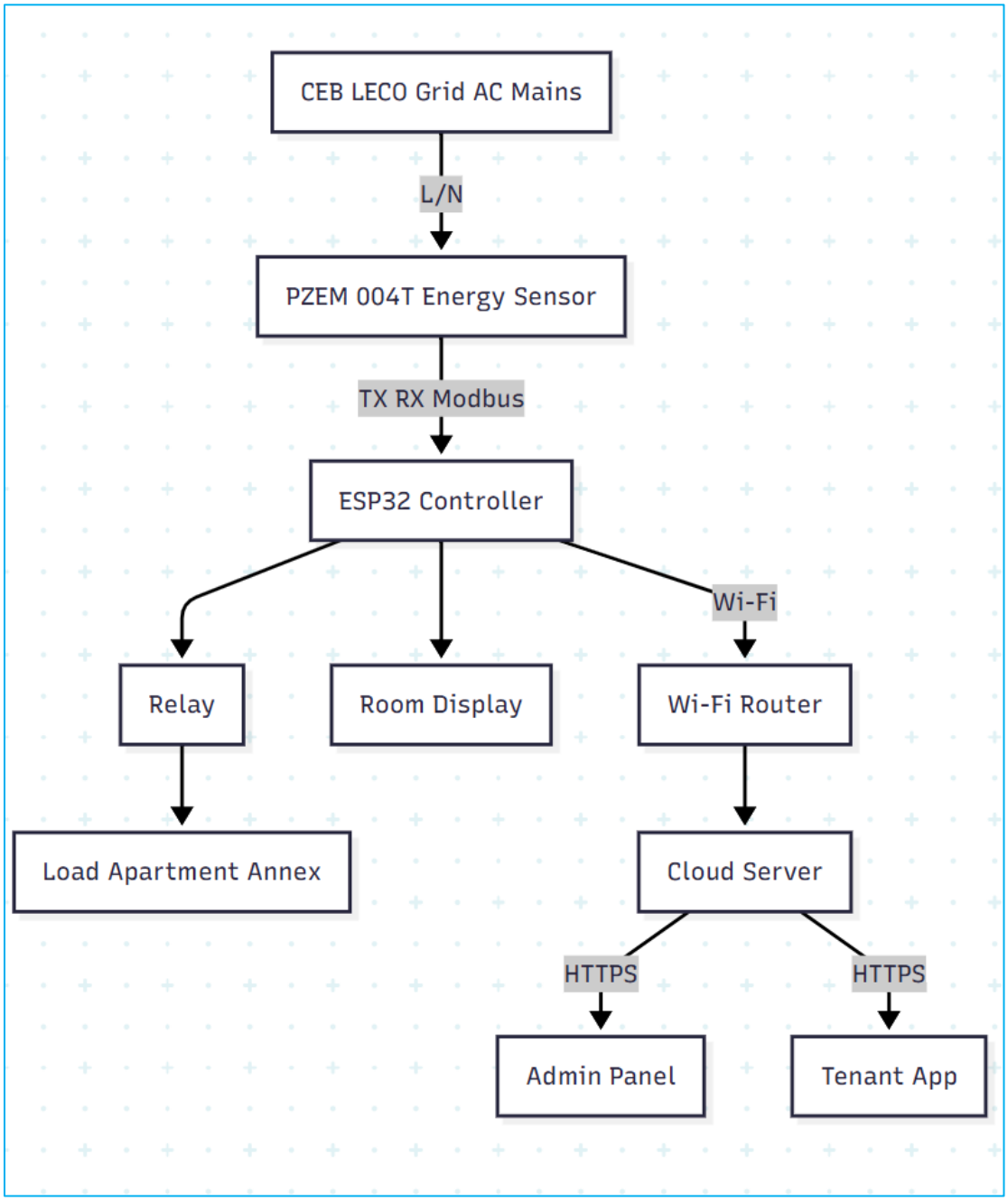

Circuit Diagram

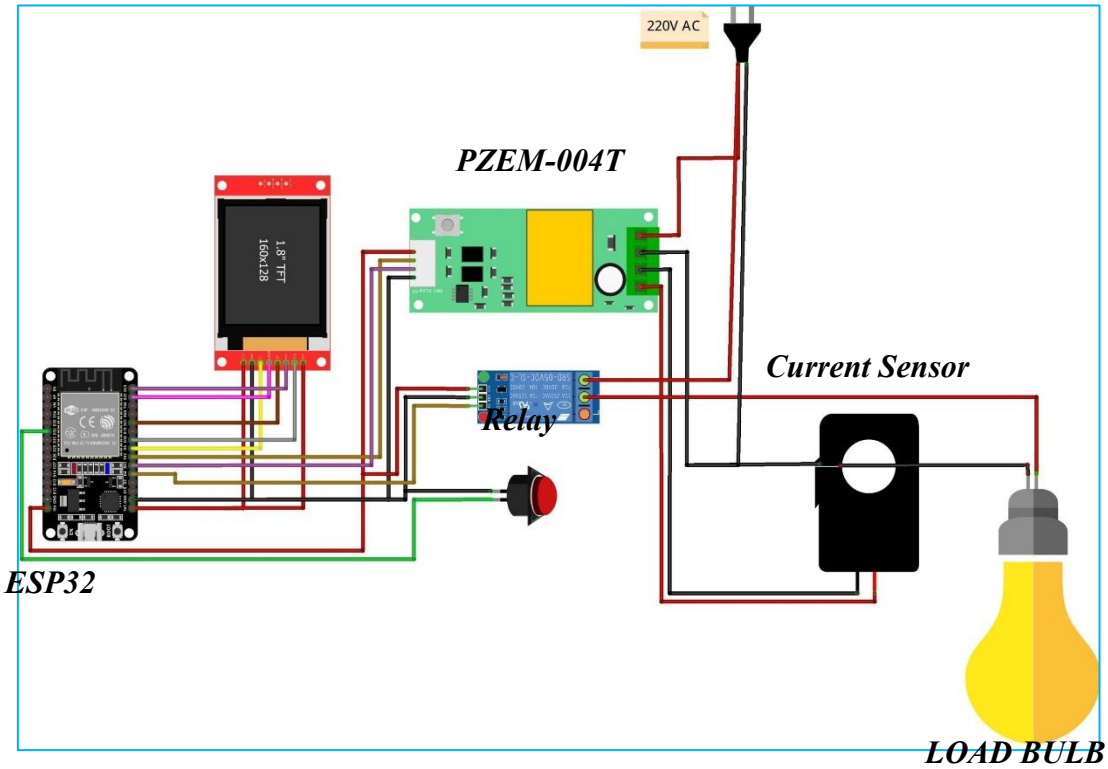

5. Expected Outcomes

The successful implementation of the proposed IoT-based Prepaid Energy Meter for apartments and annexes in Sri Lanka is expected to deliver the following outcomes:

1. **Fair and Transparent Billing**
    - Each tenant will be charged only for the electricity they actually consume.
    - Disputes between landlords and tenants regarding shared electricity bills will be eliminated.
2. **Improved Revenue Collection for Landlords**
    - Since electricity is prepaid, landlords no longer face the risk of unpaid or delayed bills.
    - All tenants must top up their accounts to continue using electricity, ensuring cost recovery.
3. **Energy Conservation and Responsible Usage**
    - Real-time balance updates and automatic cut-off will make tenants more conscious of their energy consumption.
    - This will encourage energy-saving behaviors and reduce unnecessary wastage.
4. **Enhanced Monitoring and Control**
    - Landlords will be able to monitor usage across multiple units from a single dashboard.
    - Tenants will have access to their own consumption data, creating transparency and accountability.
5. **Scalable and Adaptable Solution**
    - While initially applied to apartments and annexes, the system can be expanded to hostels, boarding houses, rental stalls, or other shared living/business spaces.
    - This makes the project a versatile and sustainable model for energy management in Sri Lanka.
6. **Contribution to Sustainable Development**
    - By reducing wastage and promoting fair distribution of electricity, the system supports Sri Lanka's efforts toward energy efficiency and sustainable urban living.

6. Work Plan

1. **Design & Planning (8–14 Sep)**
    a. Finalize system design, wiring, and component list.
2. **Procurement & Setup (11–18 Sep)**
    a. Acquire ESP32, PZEM-004T, relay, enclosure.
    b. Prepare safe bench setup.
3. **Firmware & Dashboard Development (15 Sep–6 Oct)**
    a. Implement prepaid logic, relay control, and data monitoring.
    b. Build simple landlord/tenant dashboard.
4. **Enclosure & Lab Testing (7–14 Oct)**
    a. Assemble safe hardware enclosure.
    b. Test full prepaid flow (balance → usage → cut-off → recharge).
5. **Pilot Installation (15–22 Oct)**
    a. Deploy meters in 2–3 apartments/annexes.
6. **Monitoring & Feedback (23 Oct–6 Nov)**
    a. Collect data, improve firmware/UI.
7. **Top-Up Workflow & Validation (7–18 Nov)**
    a. Finalize recharge method, run 72-hour reliability test.
8. **Documentation & Demo (18 Nov–1 Dec)**
    a. Prepare user manuals, demo video, and final proposal submission.

7. References

Noor Ziad Taha, Amera Istiqlal Badran, “IoT Based Energy Monitoring and Control System.” International Research Journal of Innovations in Engineering and Technology - IRJIET, Volume 7, Issue 3, pp 72-77, March 2023. DOI: 10.47001/IRJIET/2023.703009.[1]